How to Attach Your Smartphone to the Spotting Scope

1. Find the target you want to photograph using the spotting scope.
   (Refer to "How to Use the Spotting Scope" on page 2)



2. Mount the adapter with the smartphone attached onto the Eyepiece, then turn the Eyepiece Fixing Ring until it is firmly secured.



*Note: Ensure the smartphone adapter is securely attached so it does not fall off.
Also, double-check that the Smartphone Fixing Screw is tightened properly.

How to take photos with the smartphone

1. Once the subject is in the spotting scope's view, open the camera app on your smartphone.
2. Look at your smartphone screen and turn the focus rings on the spotting scope to get a sharp image.
3. Tap the shutter button on your smartphone camera to take a photo.

*Note: If the camera has trouble focusing, try turning off your smartphone’s autofocus function. For details, refer to your smartphone's user manual.

*Note: Using the camera's timer function helps reduce vibrations and blur when taking photos.

*Note: Turn off the camera flash before shooting.

How to attach the filter

An 67mm lens filter (sold separately) can be attached to the PRO FIELD GAIA..

1. Screw the lens filter directly onto the Objective Lens thread.

*Note: Using a thick-frame filter or stacking multiple filters may cause vignetting.

*Note: Even when using an ND100000 filter for solar eclipse photos, NEVER look directly at the sun with your naked eye. Doing so will cause blindness and permanent eye damage.

Set contents

- PRO FIELD GAIA Spotting Scope x1
- Eyepiece lens cap x1
- Objective lens cap x1
- Soft case x1
- Smartphone adapter x1
- Lens cloth x1
- Instruction manual x1

Kenko

PRO FIELD GAIA

Instruction Manual

Thank you for purchasing the Kenko PRO FIELD GAIA Spotting Scope. Before using the product, please read this instruction manual carefully to ensure proper and safe use. Keep this manual in a safe place for future reference.

Safety Precautions

To ensure safe and correct operation, please read these safety precautions thoroughly before using the product. These instructions are intended to prevent injury to yourself and others, as well as damage to property.

⚠Warning **Failure to follow these instructions or improper use of the product may result in serious injury, death, or permanent disability.**



- **NEVER look directly at the sun through this product. Doing so will cause blindness and permanent eye damage.**
- **Please read this instruction manual in its entirety before use.**
- **Handle with care. Do not drop, impact, or violently shake the product.**
- **Do not place the product on unstable surfaces. Dropping or bumping the product may cause damage.**
- **Do not store the product in direct sunlight, as this poses a fire hazard.**
- **To prevent accidents, do not use the product while walking or driving.**
- **Prolonged and repeated skin contact with the rubber eyecup may cause skin irritation. If you experience any symptoms, consult a doctor immediately.**
- **Keep small parts, such as caps, out of reach of children to prevent accidental ingestion. In the event that a child swallows a part, seek immediate medical attention.**
- **Keep packaging materials (such as plastic bags) away from children. Placing packaging materials in the mouth may cause suffocation.**
- **When mounting the product to a tripod, be careful not to pinch your fingers in the tripod's leg locks or other moving parts.**
- **Ensure the tripod screw is securely tightened to prevent the product from falling during use.**

Specifications

	PFG-48A
Lens Diameter	65mm
Magnification	16~48x
Lens Coating	Multi-Coating
Eye Relief	14~12mm
Field of v iew	2.3~1.1°
Field of view at 1000m	40.1~19.2m
Exit Pupil Diameter	4.1~1.4mm
Brightness	16.8~2
Shortest Focusing Distance	6m
Size	330x110x80mm
Weight	750g

Scan the QR code for the PDF manual.

Part names

PFG-48A

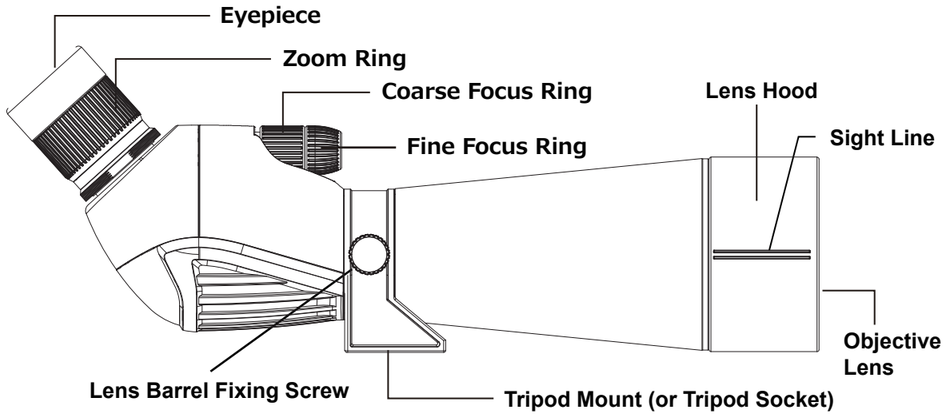

How to use the spotting scope

1. **Mount on a tripod**
Secure the tripod screw into the Tripod Socket (1/4" hole) on the bottom plate.

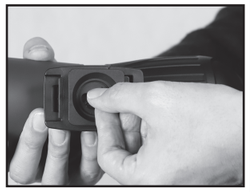

2. **Extend the Lens Hood**
Remove the objective lens cap. It is highly recommended to extend the Lens Hood to block stray light for better visibility and to protect the lens from rain.



3. **Remove the Eyepiece cap**
Twist the cap counterclockwise to remove it. Do not use excessive force to avoid unscrewing the Eyepiece itself.

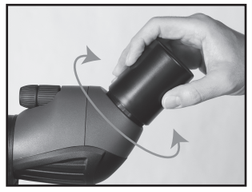

4. **Adjust the eye point**
Twist up the Eyepiece if you do not wear glasses. Leave it retracted if you wear glasses.



5. **Align the target**
Use the Sight Line on the Lens Hood to help align the scope with the object.
This makes it much easier to center the object in your field of view.

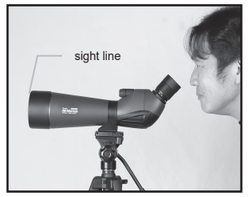

6. **Focus the image**
Look through the Eyepiece. Turn the Coarse Focus Ring first to bring the object into focus, then use the Fine Focus Ring next to it for precision tuning.

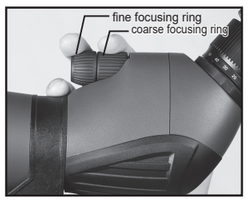

7. **Adjust magnification**
Turn the Zoom Ring to change the magnification. After zooming, readjust the focus using the Focus Rings.



* For a smooth operation, it is advisable to focus at a lower magnification first.
* By loosening the Lens Barrel Fixing Screw, the body can be rotated 360 degrees. The angle can be changed according to the conditions of use.
* This spotting scope is splash proof against rain and water splashes. It is not suitable for use underwater. If it is exposed to water, please wipe it completely off afterwards.
* As this product is splash proof, initial operation of the zoom ring may be heavy.

How to Use the Smartphone Adapter

⚠ Warning



- NEVER look directly at the sun through the spotting scope when the smartphone adapter is attached. Doing so will cause blindness, permanent eye damage, and severe damage to your smartphone.

⚠ Caution

- Do not use this product for any purpose other than its intended use.
- Do not use with smartphones weighing over 300g. Depending on the spotting scope's setup, the adapter may not support certain smartphones even if they are under 300g.
- Ensure your smartphone is securely locked in place before attaching it to the adapter.
- When placing your smartphone on the adapter, ensure the clamp does not press any buttons on the side of the phone, as this may cause a malfunction.
- Pay close attention to the balance when mounting the spotting scope to the adapter. Poor balance may cause the telescope to tip over or fall during use.
- Do not carry your smartphone while it is attached to this product, as this may cause irreparable damage.
- No liability is accepted for any damage to your smartphone resulting from a fall. Please handle with extreme care. Be careful not to pinch your fingers when attaching your smartphone to the adapter. Exercise extra caution.
- when children are using the product.

Smartphone Adapter Part Names

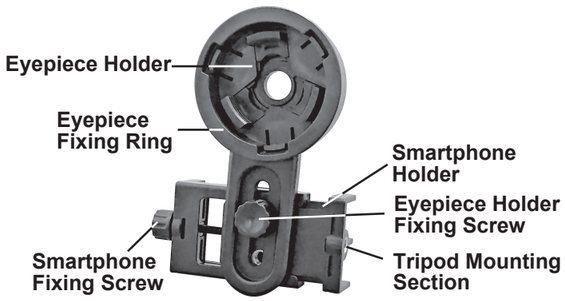

Available Sizes for Mounting

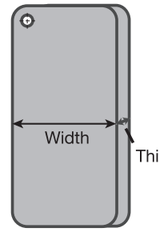

■Compatible Smartphone Sizes
- ●Width: 54–97mm
- ●Thickness: Up to 13mm



■Compatible Eyepiece Sizes
- ●Height: 26–52mm*
- ●Width: Over 14mm
- ●*Limited to circular shapes only

How to Attach Your Smartphone to the Adapter

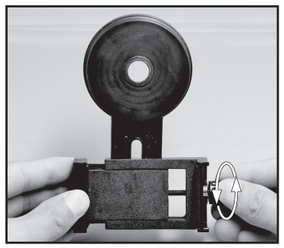

1. Turn the Smartphone Fixing Screw to adjust the holder size to fit your smartphone.



2. Place your smartphone into the Smartphone Holder, ensuring the holder does not press against any side buttons to prevent malfunctions.



3. Align your smartphone's camera lens with the center hole of the Eyepiece Holder.

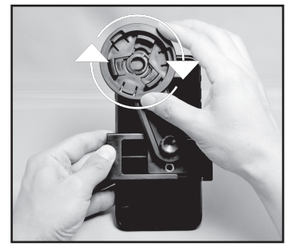

4. Fit the adapter onto the scope's Eyepiece and turn the Eyepiece Fixing Ring to lock it securely in place.